АЗТЭО
Первое Представительство Солнца

Bourdon tube pressure gauge
Model 111.14, for tyre pressure apparatus

D 88
18.08.04

Applications

- For use in tyre inflation systems for monitoring the tyre pressure when inflating the tyres of motor vehicles
- Filling stations, garages, service stations

Special features

- Designs per EN 12645
- EEC type-approval certificate
- Scale ranges 0 ... 4 bar, 0 ... 10 bar and 0 ... 12 bar

Bourdon tube pressure gauge, model 111.14, for tyre pressure apparatus

Description

Nominal size in mm
63 and 80

Accuracy class
$p_m \leq 4$ bar: ± 0.08 bar
4 bar < $p_m \leq 10$ bar: ± 0.16 bar
$p_m > 10$ bar: ± 0.25 bar
(p_m ... measured pressure)
Error limits are met within a temperature range between 15 °C and 25 °C

Scale ranges
0 ... 4 bar
0 ... 10 bar
0 ... 12 bar (only NS 80)

Pressure limitation
Steady: 3/4 x full scale value
Fluctuating: 2/3 x full scale value
Short time: full scale value

Operating temperature
Ambient: -20 … +60 °C
Medium: +40 °C maximum
Storage: -40 … +70 °C

Temperature effect
When the temperature of the measuring system deviates from the reference temperature range (-10 ... +40 °C):
$p_m \leq 4$ bar: 0.1 % of 4 bar
4 bar < $p_m \leq 10$ bar: 0.05 % of 10 bar
$p_m > 10$ bar: 0.05 % of the full scale value
(p_m ... measured pressure)

Ingress protection
IP 44 per EN 60529 / IEC 529

WIKA
Part of your business

Standard version

Process connection
Cu-alloy,
G 1/4 B (male), 14 mm flats
Lower mount (LM) or centre back mount (CBM)

Pressure element
Cu-alloy, C-type

Movement
Cu-alloy

Dial
white, black lettering, with pointer stop pin,
scale graduation 0.1 bar
NS 63: Plastic
NS 80: Aluminium

Pointer
Knife edge pointer, aluminium, black

Case
Plastic, black

Window
Clear non-splintering plastic, welded to the case

Approval
EEC type-approval certificate

Options

- Other process connection
- Metal case screw-fitted to slip-on bezel and leaded

Dimensions in mm

Standard version

Lower mount (LM)

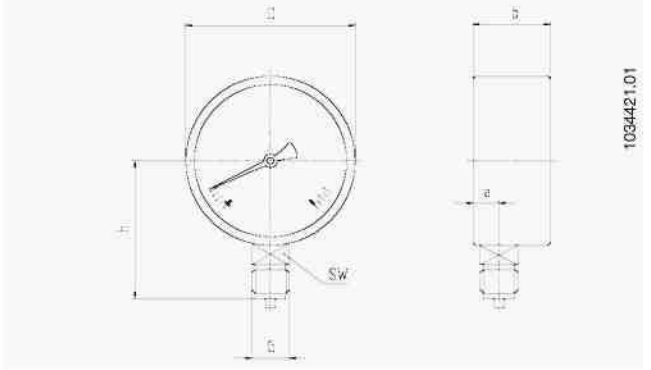

Centre back mount (CBM)

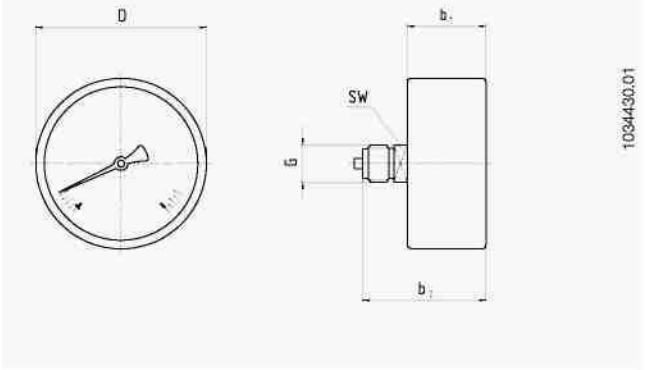

NS	Dimensions in mm								Weight in kg
	a	b	$b_1 \pm 0.5$	b2 ± 1	D	G	h ± 1	SW	
63	10	27.5	27.5	48	62	G 1/4 B	53.5	14	0.08
80	-	-	32	49	79	G 1/4 B	-	14	0.11

Process connection per EN 837-1 / 7.3

Ordering information
Model / Nominal size / Scale range / Connection size / Options

The specifications given in this document represent the state of engineering at the time of publishing.
We reserve the right to make modifications to the specifications and materials.

11/2010 GB

ООО ТД «АЗТЭО»
624260, Россия Свердловская область,
г. Асбест, пр. Ленина, 8/3
Тел: 8 (34365) 2-87-74, 2-45-52
Факс:8 (34365) 2-87-74
E-mail: zakaz@azteo.ru